PHILIPS

Alarm Clock radio for iPod/iPhone

MP3 Link

AJ7030D



Wake up to your iPod/iPhone music

Rise and shine to favorite tunes from your iPod/iPhone or FM with the dashing Philips Clock radio that will brighten your room - and mornings! Its smart dock lets you charge your devices without the need to remove its protective casing.

Enrich your sound experience

- Neodymium speaker driver for rich and clear sound
- FM digital tuning with presets
- Play and charge your iPod/iPhone simultaneously
- 6W RMS total output power

Start the day your way

- Wake up to your iPod/ iPhone music or radio tunes
- Gentle wake for a pleasant wake up experience
- Dual alarm to wake you and your partner at different times

Easy to use

- Sleep timer for easy falling asleep to your favorite music
- MP3 Link for portable music playback
- Dock any iPod/iPhone, even in its case
- Time and alarm backup for on-time wakeup even with power cut
- Auto clock synchronization with iPod/iPhone when docked

Specifications

Sound
Output power (RMS): 2x3W
Sound System: Stereo
Volume Control: Volume Control up/down

Loudspeakers
Built-in speakers: 2
Neodynium magnet system

Connectivity
MP3-Link: 3.5mm stereo input

Tuner/Reception/Transmission
Antenna: FM Antenna
Auto digital tuning
Frequency range: 87.5-108 MHz
Tuner Bands: FM
Station presets: 20

Convenience
Alarms: 24 hour alarm reset, Buzzer Alarm, Radio Alarm, Repeat alarm (snooze), Sleep timer, Dual alarm time, iPod Alarm
Display Enhancements: Brightness Control
Clock/Version: Digital
Quartz-controlled

Power
Power supply: 100-240VAC, 50/60Hz
Number of batteries: 1
Backup battery: CR2032 (included)

Accessories
Included accessories: AC-DC Adapter, Quick Use Guide, User Manual, World Wide Warranty leaflet

Dimensions
Product depth: 111 mm
Weight incl. Packaging: 0.9 kg
Packaging type: D-box
Product width: 198 mm
Product height: 71 mm
Product weight: 0.5 kg
Packaging height: 106 mm
Packaging width: 263 mm
Packaging depth: 141 mm

Audio Playback
Cradle playback mode: Charging iPod, Charging iPhone

iPod compatibility
Compatible with: iPod mini, iPod with color display, iPod 5th Generation, iPod classic, iPod nano 1st Generation, iPod nano 2nd Generation, iPod nano 3rd Generation, iPod nano 4th Generation, iPod touch, iPod touch 2nd Generation, iPod nano, iPod nano 5th Generation, iPod nano 6th generation, iPod touch 4th generation

iPhone compatibility
Compatible with: iPhone, iPhone 3G, iPhone 3GS, iPhone 4

Highlights

Dock iPod/iPhone in its case



Smartly designed spring-loaded docking port effortlessly accommodates any iPod or iPhone, without special adaptors. What's more, it works even when most protective cases are on – just dock your iPod or iPhone as it is. Now you can truly have fuss-free enjoyment of your music.

MP3 Link



The MP3 link connectivity allows direct playback of MP3 content from portable media players. Besides the benefit of enjoying your favorite music in the superior sound quality delivered by the audio system, the MP3 link is also extremely convenient as all you have to do is to plug your portable MP3 player to the audio system.

Play & charge your iPod/iPhone

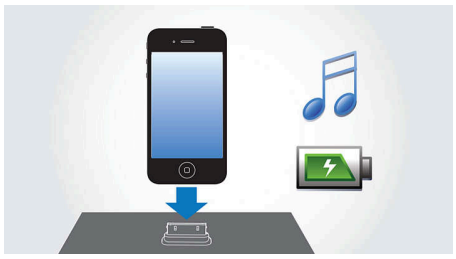

Enjoy your favorite MP3 music while charging your iPod/iPhone! The dock lets you connect your portable device directly to the Docking entertainment system so you can listen to your favorite music in superb sound. It also charges your iPod/iPhone while it plays so you can enjoy your music and not have to worry about your portable player battery running out. The Docking entertainment system automatically charges your portable device while it is docked.

© 2025 Koninklijke Philips N.V.
All Rights reserved.

Specifications are subject to change without notice. Trademarks are the property of Koninklijke Philips N.V. or their respective owners.

Issue date 2025-06-14
Version: 7.0.11

EAN: 87 12581 59724 5

www.philips.com

Always there to help you

Register your product and get support at
www.philips.com/welcome

Question? Contact Philips

AJ7030D



User manual

PHILIPS

Contents

1 Important 2
Safety 2

2 Your clock radio 3
Introduction 3
What's in the box 3
Overview of the main unit 4

3 Get started 6
Install battery 6
Connect power 6
Set clock 6
Turn on 7

4 Play from iPod/iPhone 8
Compatible iPod/iPhone 8
Listen to audio from iPod/iPhone 8
Remove the iPod/iPhone 8
Charge the iPod/iPhone 9
Adjust volume 9

5 Listen to FM radio 10
Tune to FM radio stations 10
Store FM radio stations automatically 10
Store FM radio stations manually 10
Select a preset radio station 10

6 Other features 11
Set alarm timer 11
Set sleep timer 11
Play audio from an external device 12
Adjust display brightness 12

7 Product information 13
Specifications 13

8 Troubleshooting 14

9 Notice 15

1 Important

Safety

Important Safety Instructions

- Read these instructions.
- Keep these instructions.
- Heed all warnings.
- Follow all instructions.
- Do not use this apparatus near water.
- Clean only with dry cloth.
- Do not block any ventilation openings. Install in accordance with the manufacturer's instructions.
- Do not install near any heat sources such as radiators, heat registers, stoves, or other apparatus (including amplifiers) that produce heat.
- Protect the power cord from being walked on or pinched, particularly at plugs, convenience receptacles, and the point where they exit from the apparatus.
- Only use attachments/accessories specified by the manufacturer.
- Use only with the cart, stand, tripod, bracket, or table specified by the manufacturer or sold with the apparatus. When a cart is used, use caution when moving the cart/apparatus combination to avoid injury from tip-over.



- Unplug this apparatus during lightning storms or when unused for long periods of time.
- Refer all servicing to qualified service personnel. Servicing is required when the apparatus has been damaged in any way, such as power-supply cord or plug is damaged, liquid has been spilled or objects have fallen into the apparatus, the apparatus has been exposed to rain or moisture, does not operate normally, or has been dropped.
- Battery usage CAUTION – To prevent battery leakage which may result in bodily injury, property damage, or damage to the unit:
  - Install all batteries correctly, + and - as marked on the unit.
  - Do not mix batteries (old and new or carbon and alkaline, etc.).
  - Remove batteries when the unit is not used for a long time.
- Apparatus shall not be exposed to dripping or splashing.
- Do not place any sources of danger on the apparatus (e.g. liquid filled objects, lighted candles).
- Where the plug of the Direct Plug-in Adapter is used as the disconnect device, the disconnect device shall remain readily operable.
- Use only power supplies listed in the user manual.

Warning

- Never remove the casing of this apparatus.
- Never lubricate any part of this apparatus.
- Never place this apparatus on other electrical equipment.
- Keep this apparatus away from direct sunlight, naked flames or heat.
- Never look into the laser beam inside this apparatus.
- Ensure that you always have easy access to the power cord, plug or adaptor to disconnect this apparatus from the power.

2 Your clock radio

Congratulations on your purchase, and welcome to Philips! To fully benefit from the support that Philips offers, register your product at www.philips.com/welcome.

Introduction

With this clock radio, you can:

- listen to FM radio;
- enjoy audio from iPod/iPhone or an external device;
- know the time; and
- wake up by buzzer alarm, radio, or audio in iPod/iPhone.

What's in the box

Check and identify the contents of your package:

- Main unit (with a battery)
- AC adapter(plug switchable)
- User manual

Overview of the main unit

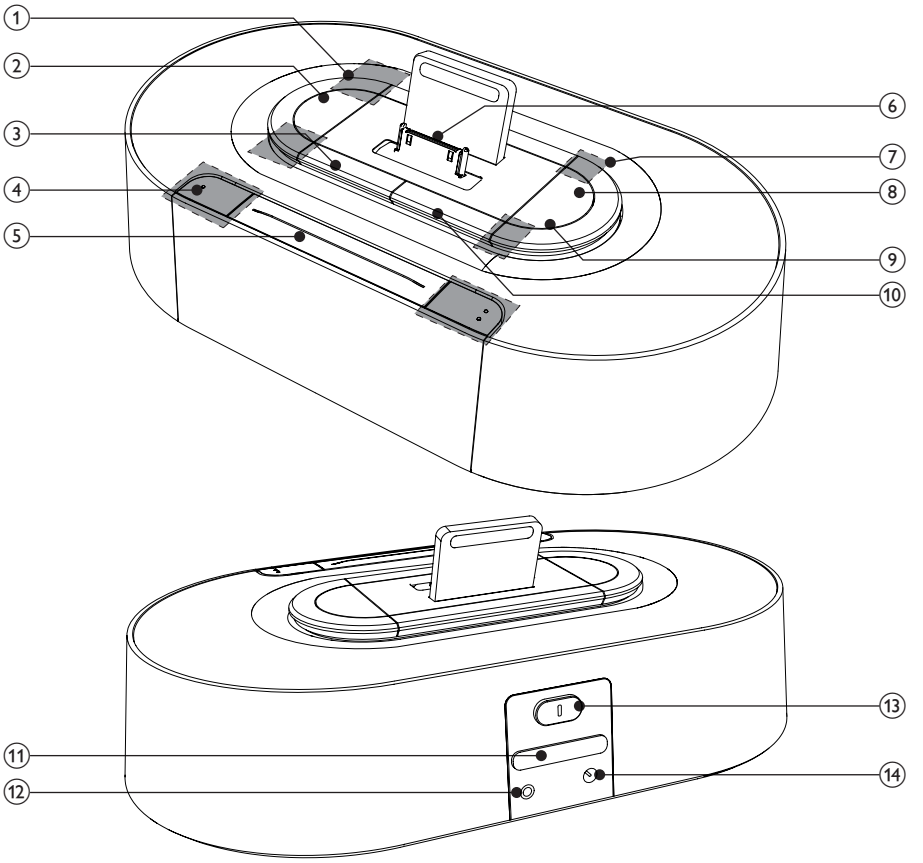

1. PRESET ▲▼
   - Select a preset radio station.
   - Adjust hour and minute.
2. TUNING +/-
   - Tune to a FM radio station.
   - Adjust hour and minute.
3. ⏻
   - Turn on/off the clock radio.
   - Switch the clock radio to standby mode.
4. AL1/AL2
   - Set alarm.
   - View alarm settings.
   - Activate/deactivate alarm timer.
5. SNOOZE/BRIGHTNESS
   - Snooze alarm.
   - Adjust display brightness.
6. iPod/iPhone
   - Dock for iPod/iPhone.
7. VOLUME +/-
   - Adjust volume.

⑧ SET
- Store radio stations automatically/ manually.
- Set clock.

⑨ SLEEP
- Set sleep timer.

⑩ SOURCE
- Select source.

⑪ Battery tray

⑫ AUX IN
- Connect an external audio device.

⑬ AL1/2 iPhone·RADIO·BUZZ
- Select alarm source.

⑭ DC 5V
- Power supply socket.

3 Get started

Always follow the instructions in this chapter in sequence.

Install battery

Caution

- Risk of explosion! Keep batteries away from heat, sunshine or fire. Never discard batteries in fire.
- Danger of explosion if battery is incorrectly replaced. Replace only with the same or equivalent type.
- The battery contains chemical substances, so it should be disposed of properly.
- Keep children away from the battery.
- Perchlorate Material - special handling may apply. See www.dtsc.ca.gov/hazardouswaste/perchlorate.

Note

- You can only use AC power as power supply. The pre-installed lithium CR2032 battery can only back up time and alarm.
- When power is disconnected, the display backlight is off.

For first-time use:
Remove the protective tab to activate the battery.
To replace the battery:

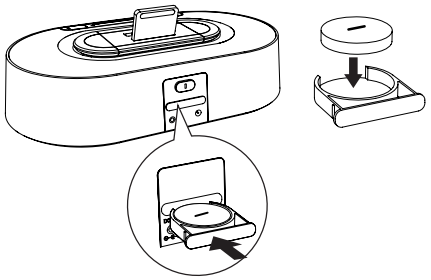

Connect power

Caution

- Risk of product damage! Ensure that the power voltage corresponds to the voltage printed on the back or underside of the clock radio.
- Risk of electric shock! When you unplug the AC adapter, always pull the plug from the socket. Never pull the cord.

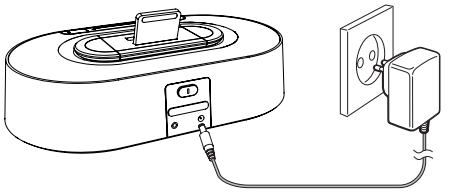

Set clock

1. In standby mode, press and hold **SET** for two seconds to activate clock setting mode.
   ↳ **[12H]** or **[24H]** is displayed.
2. Press **TUNING +/-** or ▲ / ▼ repeatedly to select 12/24 hour format.
3. Press **SET** again to confirm.
   ↳ The hour digits begin to blink.
4. Repeat steps 2 to 3 to set the hour and minute.

Note

- If clock is not manually set, when iPod/iPhone is connected, the clock radio synchronizes time from the iPod/iPhone automatically.

Turn on

Press ⏻.

↳ The clock radio switches to the last selected source.

Switch to standby mode

Press ⏻ to switch the clock radio to standby mode.

↳ The clock (if set) appears on the display panel.

4 Play from iPod/ iPhone

You can enjoy audio from iPod/iPhone through this clock radio.

Compatible iPod/iPhone

The clock radio supports these iPod and iPhone models:
Made for:

- iPod touch (1st, 2nd, 3rd, and 4th generation)
- iPod classic
- iPod with video
- iPod nano (1st, 2nd, 3rd, 4th, 5th, and 6th generation)
- iPod with color display
- iPod mini
- iPhone 4
- iPhone 3GS
- iPhone 3G
- iPhone

Listen to audio from iPod/ iPhone

1 Press **SOURCE** repeatedly to select iPod/ iPhone mode.

2 Place the iPod/iPhone in the dock.

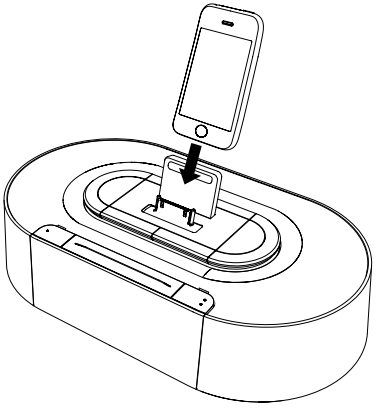

3 Start to play audio from the iPod/iPhone.

Remove the iPod/iPhone

Pull the iPod/iPhone out of the dock.

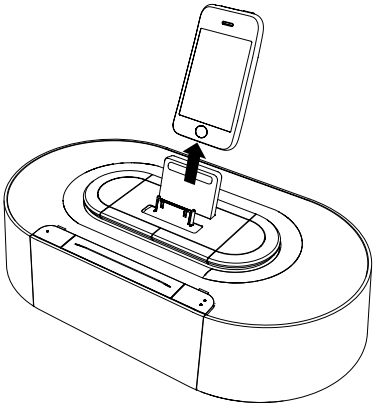

Charge the iPod/iPhone

When the clock radio is connected to power, the docked iPod/iPhone starts charging.

Adjust volume

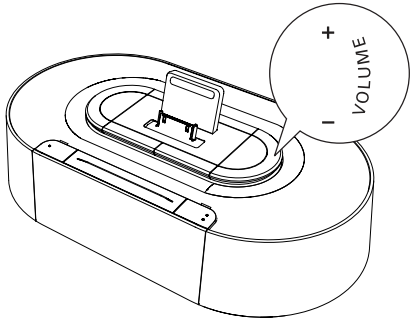

5 Listen to FM radio

Tune to FM radio stations

Tip

- Position the antenna as far as possible from TV, VCR, or other radiation source.
- For better reception, fully extend and adjust the position of the antenna.

1 Press **SOURCE** repeatedly to select FM tuner source.
2 Press and hold **TUNING +/-** for 2 seconds.
↳ The clock radio tunes to a station with strong reception automatically.
3 Repeat steps 2 to tune to more stations.

To tune to a station manually:
Press **TUNING +/-** repeatedly until you find optimal reception.

Store FM radio stations automatically

You can store a maximum of 20 FM radio stations.
In tuner mode, press a hold **SET** for two seconds.
↳ The clock radio stores all the available FM radio stations and broadcasts the first available station automatically.

Store FM radio stations manually

1 Tune to an FM radio station.
2 Press **SET**.
↳ The preset number begins to blink.
3 Press **PRESET ▲ / ▼** repeatedly to select a number.
4 Press **SET** again to confirm.
5 Repeat steps 1 to 4 to store other stations.

Note

- To remove a pre-stored station, store another station in its place.

Select a preset radio station

In tuner mode, press **PRESET ▲ / ▼** to select a preset number.

6 Other features

Set alarm timer

Set alarm

In standby mode, you can set two alarms to ring at different time.

Note

- Make sure that you have set the clock correctly.

1 Press and hold **AL1**/**AL2** for two seconds to activate alarm setting mode.
   ↳ The hour digits and alarm icon begin to blink.
2 Press **TUNING +/-** or ▲ / ▼ to set the hour.
3 Press **AL1**/**AL2** to confirm.
   ↳ The minute digits begin to blink.
4 Repeat steps 2 to 3 to set the minute and alarm volume.



Select alarm source

Adjust **AL1/2 iPhone·RADIO·BUZZ** control to select alarm source for both alarms.

Note

- When alarm time comes, the selected radio, buzzer, or iPod/iPhone turns on.
- You can only select the same alarm source for Alarm 1/ Alarm2.
- If iPhone is selected as alarm source, while no iPod/ iPhone is connected, the clock radio switches to buzzer source instead.

Activate/deactivate alarm timer

1 Press **AL1**/**AL2** to view alarm settings.
2 Press **AL1**/**AL2** again to activate or deactivate the alarm timer.
   ↳ 1 or 2 is displayed if alarm timer is on and disappears if it is off.

To stop the ringing alarm, press the corresponding **AL1**/**AL2**.
   ↳ The alarm repeats ringing for the next day.

Snooze alarm

When alarm sounds, press **SNOOZE**.
   ↳ The alarm snoozes and repeats ringing nine minutes later.

To adjust alarm interval (in minutes), press **SNOOZE** repeatedly.

Set sleep timer

This clock radio can switch to standby mode automatically after a preset period.
Press **SLEEP** repeatedly to select the sleep timer period (in minutes).
   ↳ When the sleep timer is activated, zZ is displayed .

To deactivate the sleep timer, press **SLEEP** repeatedly until **[OFF]** (off) is displayed.

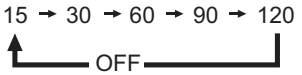

Play audio from an external device

You can listen to audio from an external device through this clock radio.

1 Connect the audio cable to:
- the **AUX IN** socket.
- the AUDIO OUT sockets of an external device.

2 Press **SOURCE** repeatedly to select AUX source.
↳ is displayed.

3 Start to play the external device (see the user manual of this device).

Adjust display brightness

Press **BRIGHTNESS** repeatedly to select different brightness levels.

7 Product information

Note

- Product information is subject to change without prior notice.

Specifications

Amplifier

Rated Output Power	2 X 3 W RMS

Tuner

Tuning Range	FM: 87.5 - 108 MHz
Sensitivity - Mono, 26dB S/N Ratio	FM: <22 dBf
Search Selectivity	FM: <28 dBf
Total Harmonic Distortion	FM: <2%
Signal to Noise Ratio	FM: >55 dB

General information

AC Power	Model: ASSA1E-050200;Output: 5 V; 2 A
Operation Power Consumption	8 W
Standby Power Consumption	<1 W
Dimensions - Main Unit (W x H x D)	198 x 71 x 111 mm
Weight - With Packing - Main Unit	0.9 kg 0.5 kg

8 Troubleshooting

Warning

- Never remove the casing of this device.

To keep the warranty valid, never try to repair the system yourself.
If you encounter problems when using this device, check the following points before requesting service. If the problem remains unsolved, go to the Philips Web page (www.philips.com/support). When you contact Philips, make sure that the device is nearby and the model number and serial number are available.

No power

- Ensure that the AC power plug of the clock radio is connected properly.
- Ensure that there is power at the AC outlet.

No response from the clock radio

- Disconnect and reconnect the AC power plug, then turn on the clock radio again.

Poor radio reception

- Increase the distance between the unit and your TV or VCR.
- Fully extend the FM antenna.

Alarm does not work

- Set the clock/alarm correctly.

Clock/alarm setting erased

- Power has been interrupted or the power plug has been disconnected.
- Reset the clock/alarm.

9 Notice

Any changes or modifications made to this device that are not expressly approved by WOOX Innovations may void the user's authority to operate the equipment.

CE

This product complies with the radio interference requirements of the European Community.

Your product is designed and manufactured with high quality materials and components, which can be recycled and reused.

When this crossed-out wheeled bin symbol is attached to a product it means that the product is covered by the European Directive 2002/96/EC.
Please inform yourself about the local separate collection system for electrical and electronic products.
Please act according to your local rules and do not dispose of your old products with your normal household waste. Correct disposal of your old product helps to prevent potential negative consequences for the environment and human health.

Your product contains batteries covered by the European Directive 2006/66/EC, which cannot be disposed with normal household waste.Please inform yourself about the local rules on separate collection of batteries because correct disposal helps to prevent negative consequences for the environmental and human health.

Environmental information

All unnecessary packaging has been omitted. We have tried to make the packaging easy to separate into three materials: cardboard (box), polystyrene foam (buffer) and polyethylene (bags, protective foam sheet.)
Your system consists of materials which can be recycled and reused if disassembled by a specialized company. Please observe the local regulations regarding the disposal of packaging materials, exhausted batteries and old equipment.

Made for iPod iPhone

"Made for iPod" and "Made for iPhone" mean that an electronic accessory has been designed to connect specifically to iPod or iPhone respectively, and has been certified by the developer to meet Apple performance standards. Apple is not responsible for the operation of this device or its compliance with safety and regulatory standards. Please note that the use of this accessory with iPod or iPhone may affect wireless performance.
iPod and iPhone are trademarks of Apple Inc., registered in the U.S. and other countries.

Note

- The type plate is located on the bottom of the apparatus.



Specifications are subject to change without notice.
2013 © WOOX Innovations Limited. All rights reserved.
This product was brought to the market by WOOX Innovations Limited or one of its affiliates, further referred to in this document as WOOX Innovations, and is the manufacturer of the product. WOOX Innovations is the warrantor in relation to the product with which this booklet was packaged. Philips and the Philips Shield Emblem are registered trademarks of Koninklijke Philips N.V.



AJ7030D_UM_12_V3.1